# MODEL: P26337A1FTT.V2*

ALL ACCESSORIES OPTIONAL

ADA COMPLIANT

CA TITLE 24 COMPLIANT

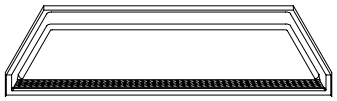

PERSPECTIVE VIEW - N.T.S.

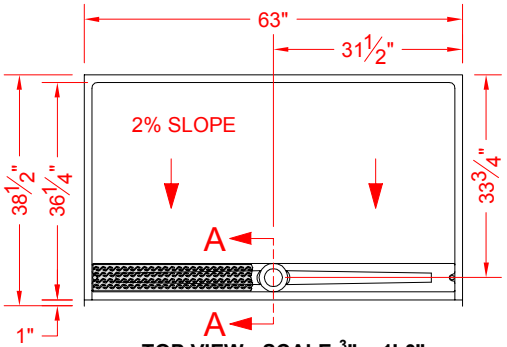


TOP VIEW - SCALE ⅜" = 1'-0"

SEE OVER

## Features:

-ADA compliant roll-in shower pan with trench drain and stainless steel grate with magnetic attachment
-Available in various threshold heights
-Molded gelcoat/fiberglass shower pan

***OTHER THRESHOLD HEIGHTS AVAILABLE UPON REQUEST**

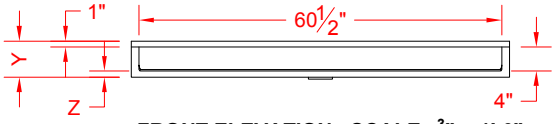


FRONT ELEVATION - SCALE: ⅜" = 1'-0"

| MODEL # | UNIT HEIGHT Y | THRESHOLD HEIGHT Z* |
|---|---|---|
| P26337A1FTT.V2 | 6" | 1" MIN. |
| P26337A2FTT.V2 | 7" | 2" MAX. |

* - SEE BACK FOR DETAIL SECTIONS

## PRODUCT SPECIFICATIONS:

-Single-piece shower pan shall be constructed of gelcoat/fiberglass and have a stainless steel trench drain grate with magnetic attachment.
-Rough-In: Stud opening +1/4" / -0" nominal dimensions.

C.S.I. FORMAT SPECIFICATION TEXT AVAILABLE

## PRODUCT INFORMATION:

-Accessories: Polished chrome/satin stainless standard, others available.
-Colors: White as standard, others to match any major fixture manufacturer, also available with sprayable solid surface in many colors
-Custom curb heights, other than shown, are available (between min. and max.)

## ACCESSORIES:

INSTALLED BY OTHERS:
-Grab bar
-Seat, folding
-Mixing valve, pressure-balancing, lever handle, pre-plumbed tree to supply elbow
-Curtain and rod
-No-caulk brass drain (included with grate)

## CODES:

Designed and manufactured in compliance with the following standards and codes:

-A.N.S.I. Z124.2 Standards for Plastic Showers
-I.P.C. International Plumbing Code
-U.P.C. Uniform Plumbing Code
-A.D.A. Accessibility Guildelines for Buildings and Facilities
-A.N.S.I. A117.1 Accessible and Usable Buildings and Facilities
-U.P.C. Uniform Plumbing Code
-California Building Code Title 24, section 11B

## NOTICE OF LIMITATION:

-Recess as needed to meet code
-Adhere to floor as required

bestbath Intelligent Designs

*We reserve the right to make revisions without notice in the design of fixtures or in packaging unless this right has specifically been waived at the time the order is accepted.*

## P26337A1FTT.V2

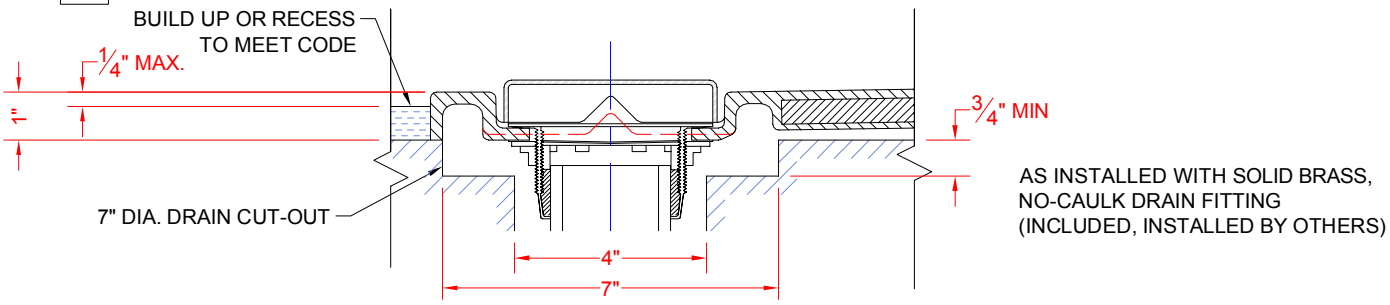


**SECTION A-A - SCALE: 3" = 1'-0"**

## P26337A2FTT.V2

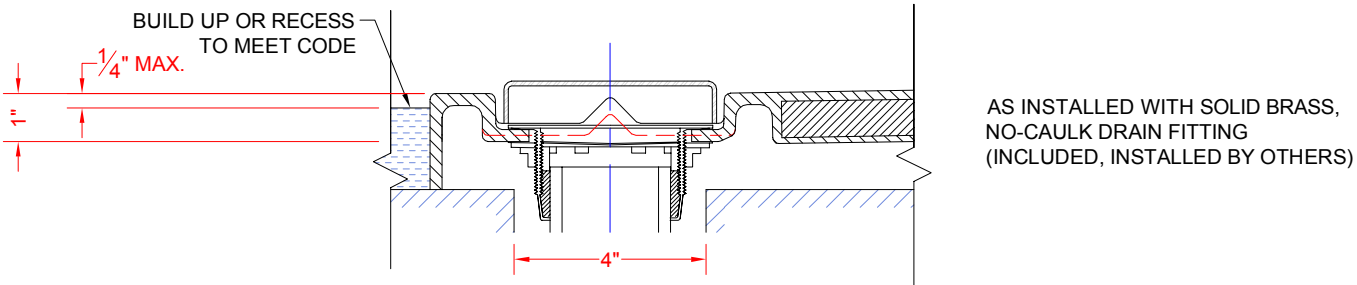


**SECTION A-A - SCALE: 3" = 1'-0"**

****OTHER THRESHOLD HEIGHTS AVAILABLE UPON REQUEST****

bestbath
Intelligent Designs